49-CS161/36/CD/EST/AS

SPEC-SHEET
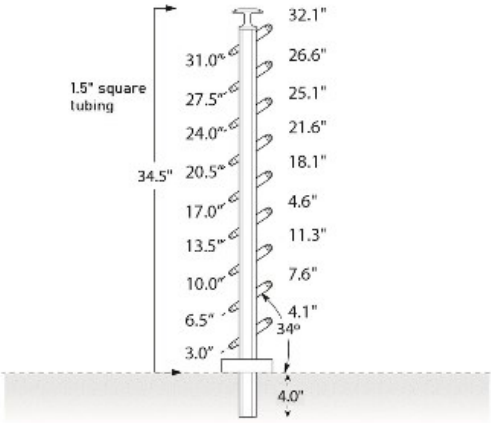
49-CS161/36/CD/EST/AS C.A.T. 1-1/2" Square 36" H Core Drill Stair Top End Post for 1/8" Cable - Adjustable Top Saddle for Round Handrail