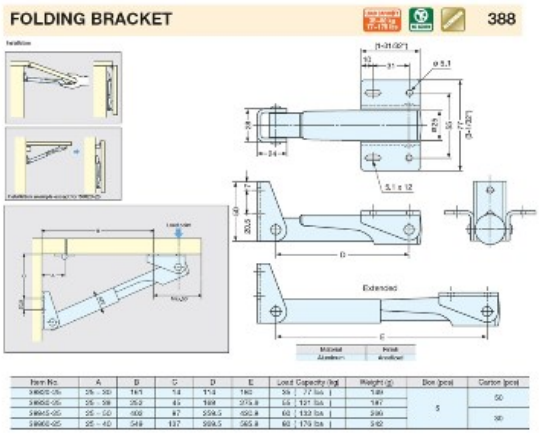
BuyRailings
ARCHITECTURAL & INDUSTRIAL RAILINGS

SG-38845-25

SPEC-SHEET

SG-38845-25 17" Folding Bracket Anodized Aluminum. 132 Lbs Load Capacity





Item No.	A	B	C	D	E	Load Capacity (kg)	Weight (g)	Box (pcs)	Carton (pcs)
38845-25	25 ~ 30	1161	114	1110	1162	59 [77 lbs]	1389	5	50
38845-25	25 ~ 39	2522	65	1669	2376.8	59 [127 lbs]	1467		
38845-25	25 ~ 50	600	97	559.5	692.8	60 [132 lbs]	1586		30
38845-25	25 ~ 40	549	137	559.5	565.8	60 [179 lbs]	1462		

- - Automatically Locks when flap is in open position
- - Has release lever for un-locking
- - For panel thickness 15~35mm (19/32"~1-3/8")
- - Required Quantity:
  - Width up to 600mm (23-5/8")...1pc
  - Width 600~1300mm (23-5/8"~51-3/16")...2pcs