BuyRailings
ARCHITECTURAL & INDUSTRIAL RAILINGS

00-540/1H

SPEC-SHEET

00-540/1H Polished Brass Flange Canopy 1-1/2" OD

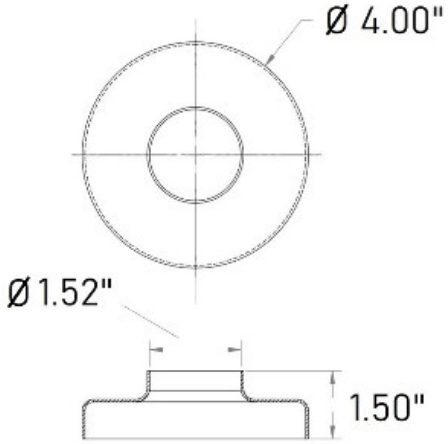

The 00-540/1H round flange canopy or escutcheon plate is made of brass, has a polished finish and allows for a 1-1/2" diameter round tube to pass through its center hole. Use this cover as a decorative addition to flanges that are often unseemly because of the mounting hardware used with them.

Material Care: Maintain a polished finish with metal polish, item# 00202. Apply with a soft, damp cloth.

Call toll free at 877-810-4116 to speak with a product specialist.