BuyRailings
ARCHITECTURAL & INDUSTRIAL RAILINGS

E40900

SPEC-SHEET

E40900 Glass Standoff 1-3/16" Round - 1.57" Depth - for 5/16 -21/32” Glass Thickness - in Satin Stainless Steel 316

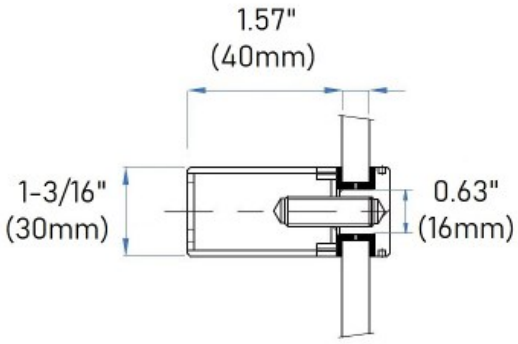

This 1-3/16”round wall mount glass clamp from IAM Design is made of 316 grade stainless steel, has a brushed (satin) finish and is designed to hold 5/16 – 21/32” thick glass. It has an offset from the wall to the glass of 1.57" (40mm). Mount this bracket on a wall (recommended on a stud) or on a rectangular vertical post using hardware appropriate for the material that it mounts on.

E40900 can be used both indoors and outdoors.

Material Care: Clean with stainless steel cleaner and protectant, item# CAE-ZCleankIT.

Consult local building codes for rail height, wall offset and other requirements.

Call toll free at 877-810-4116 to speak with a product specialist.