49-CS161/36/W/S/ASF

SPEC-SHEET
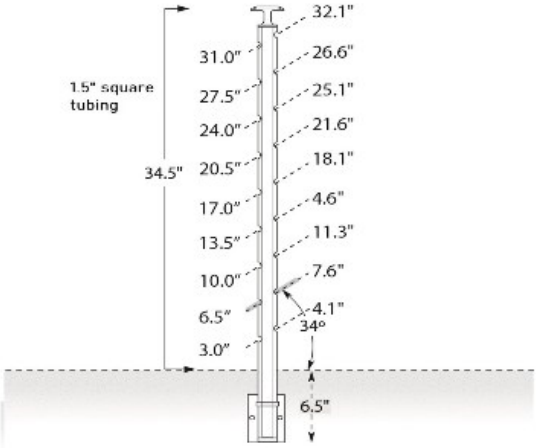
49-CS161/36/W/S/ASF C.A.T. 1-1/2" Square 36" H Fascia Mount Stair Center Post for 1/8" Cable - Adjustable Top Saddle for Square Handrail